JOYOLIGHt

LG3030K

INSTALLATION GUIDE

2019-01

READ CAREFULLY BEFORE INSTALLATION

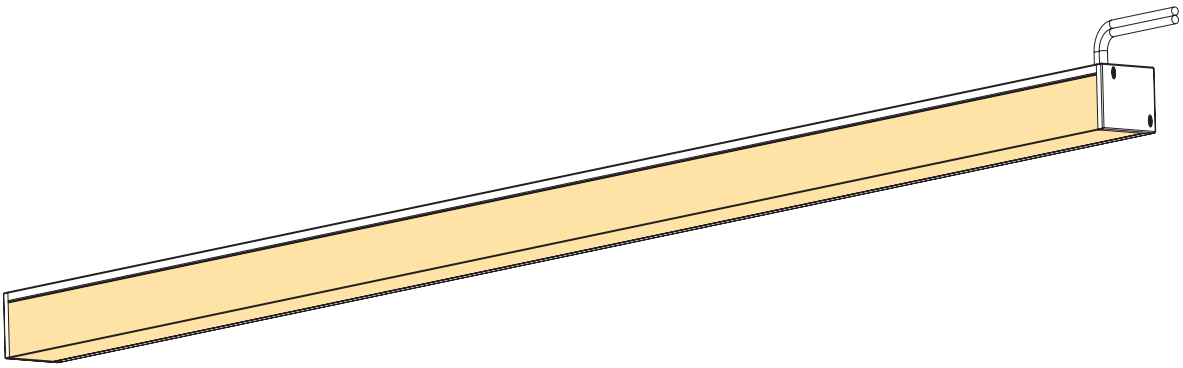

#12, 5200 Dixie Rd,
Mississauga, ON
Canada L4W 1E4
www.joyolight.ca
sales@joyolight.com

Installation

1. Install the clips

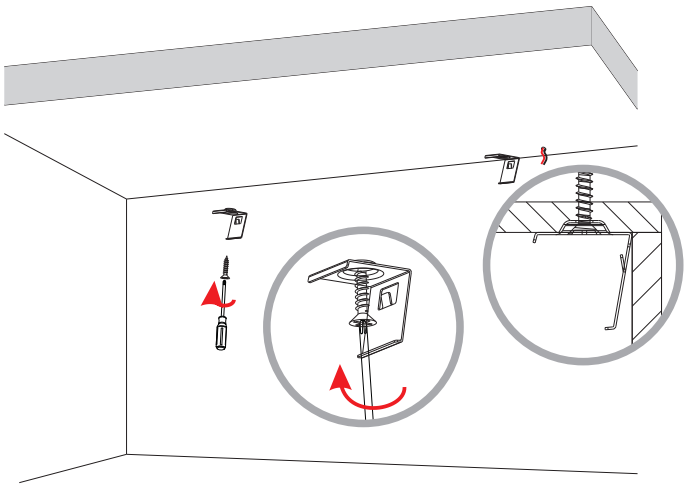

2. Connect the power cord, fixed the luminaire by the clips.

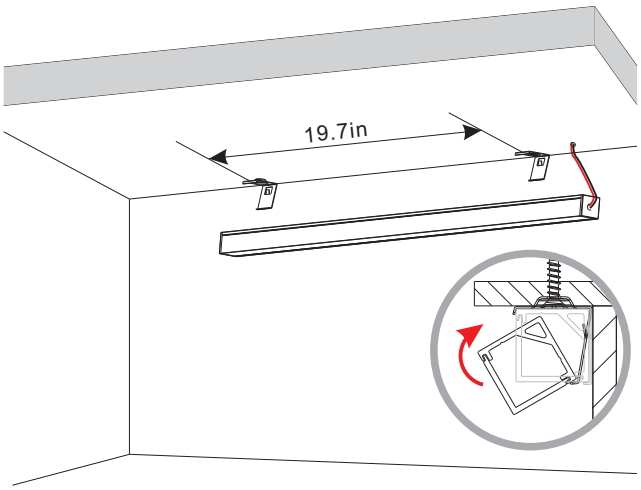

3. Debug the light and complete the installation.

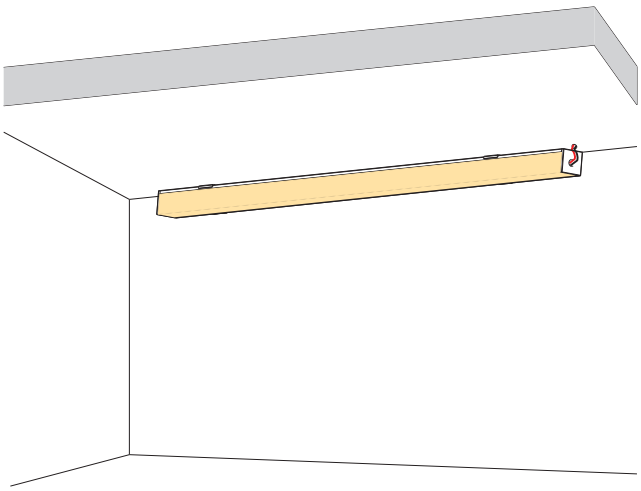

JOYOLIGHT GROUP INC.
#12, 5200 dixie Rd, mississauga, ON , Canada L4W 1E4 www.joyolight.ca/en/ sales@joyolight.com

Specifications are subject to change without notice. Every effort has been made for accuracy, and errors are unintentional.